Photoinjector Laser for CTF3

G J Hirst
Central Laser Facility

Plan

- Background
- Current status of laser elements
- Plans (July, Q3-4 2006)

G J Hirst
Central Laser Facility

Laser system schematic

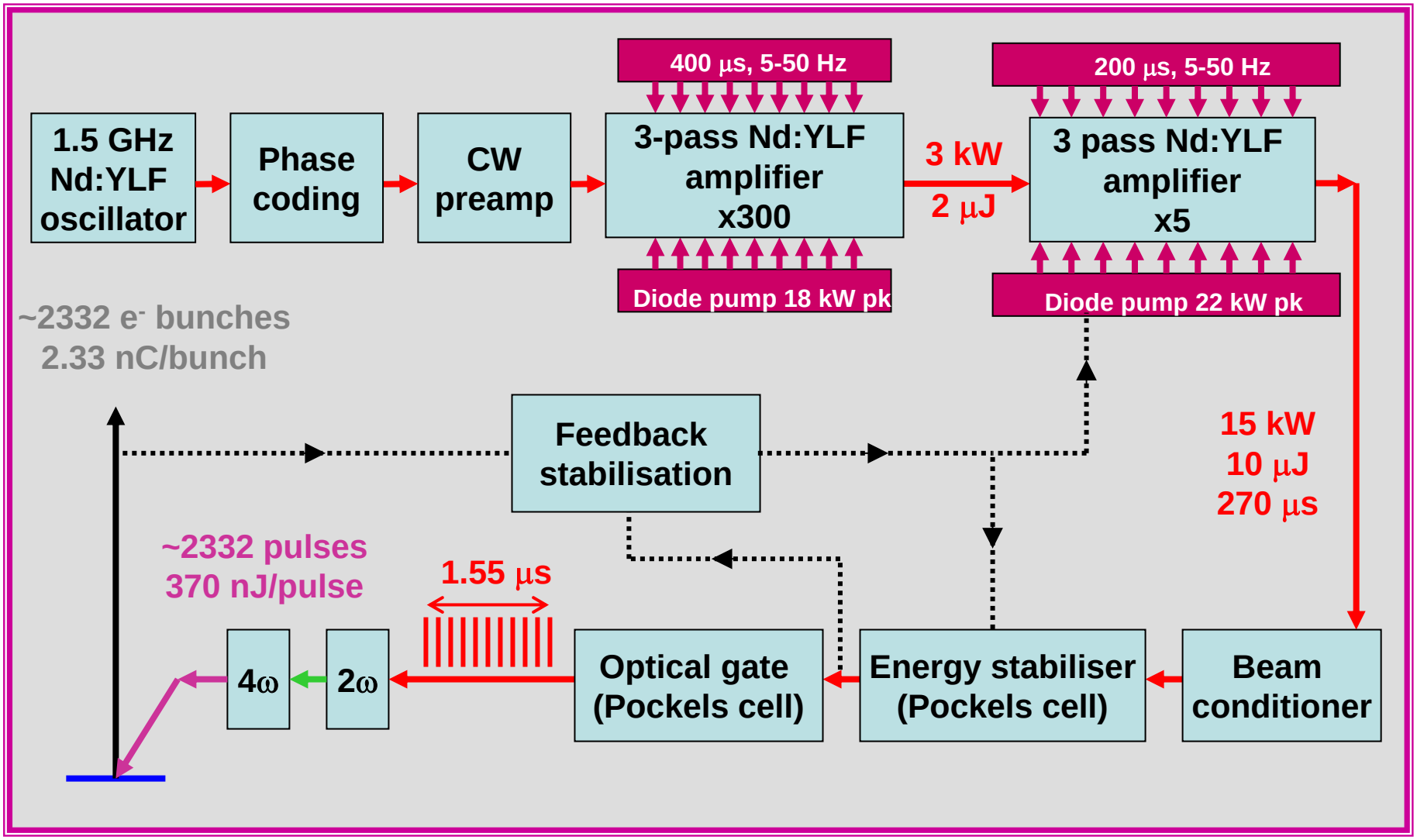

G J Hirst
Central Laser Facility

Practical layout

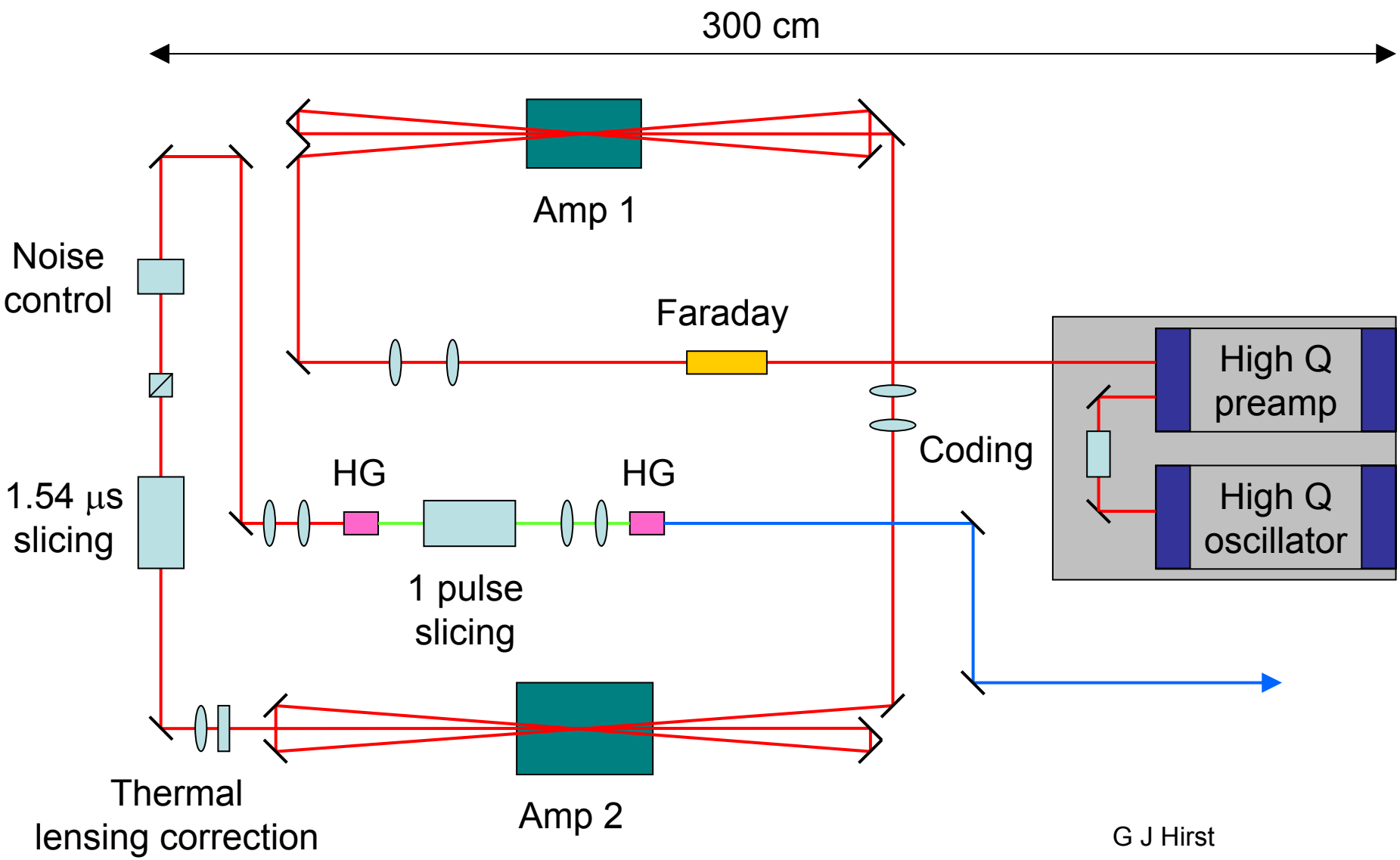

G J Hirst
Central Laser Facility

Oscillator/Preamplifier

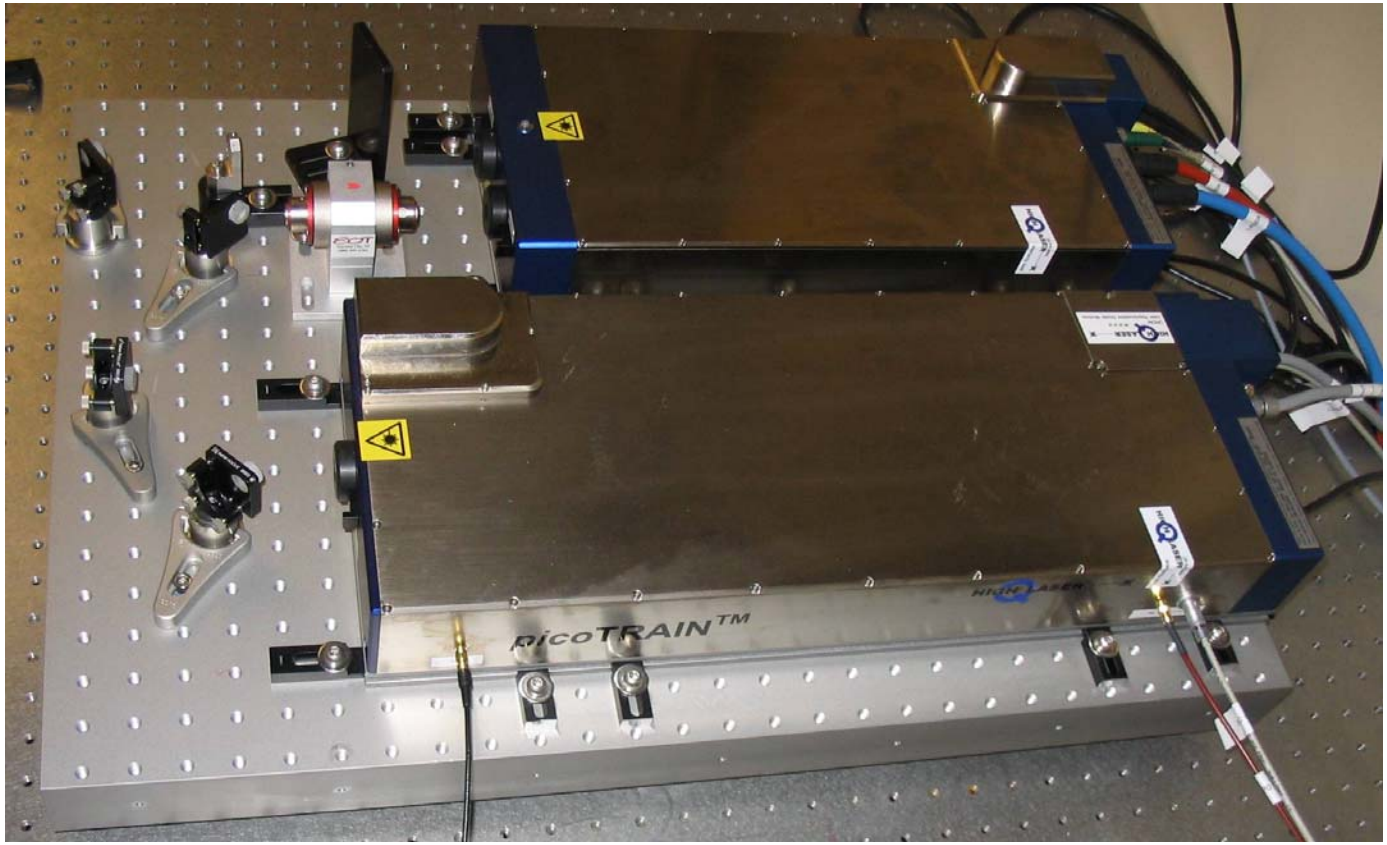

- Delivered, installed and commissioned in Q2 2005
- Has met all specifications (power, beam quality, timing and amplitude stability)
- Seems capable of accommodating coding hardware

G J Hirst
Central Laser Facility

Pump diodes

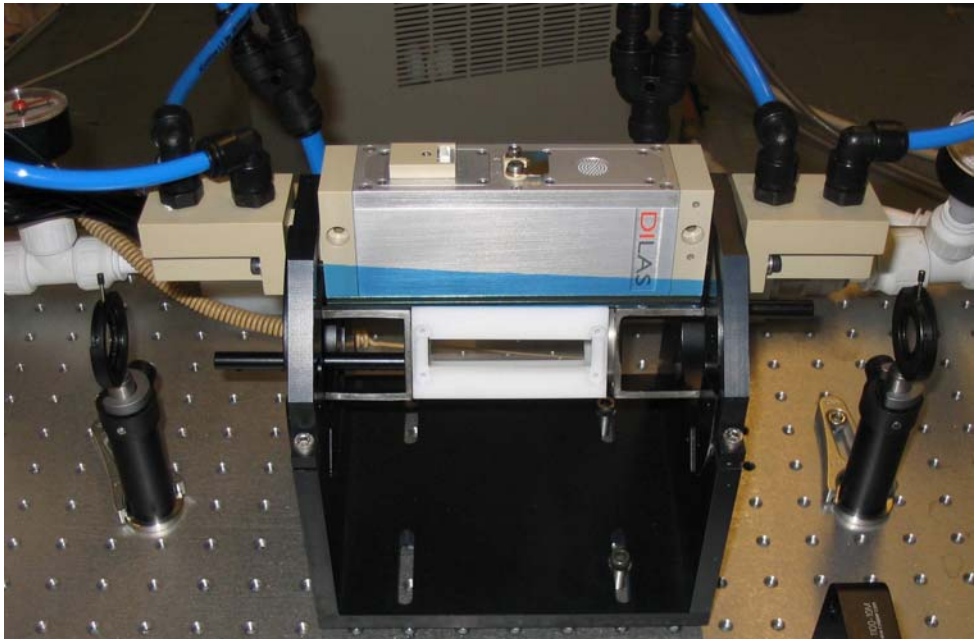

- Amp 1 and Amp 2 diodes, drivers and chillers delivered
- Amp 1 diode set fully operational
- Amp 2 chiller being commissioned

G J Hirst
Central Laser Facility

Amplifier 1

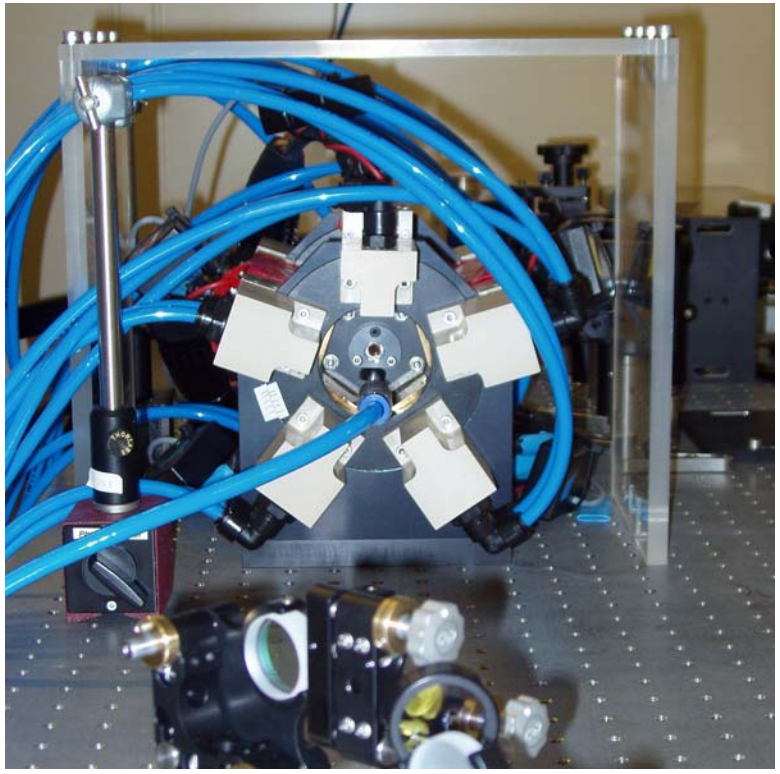

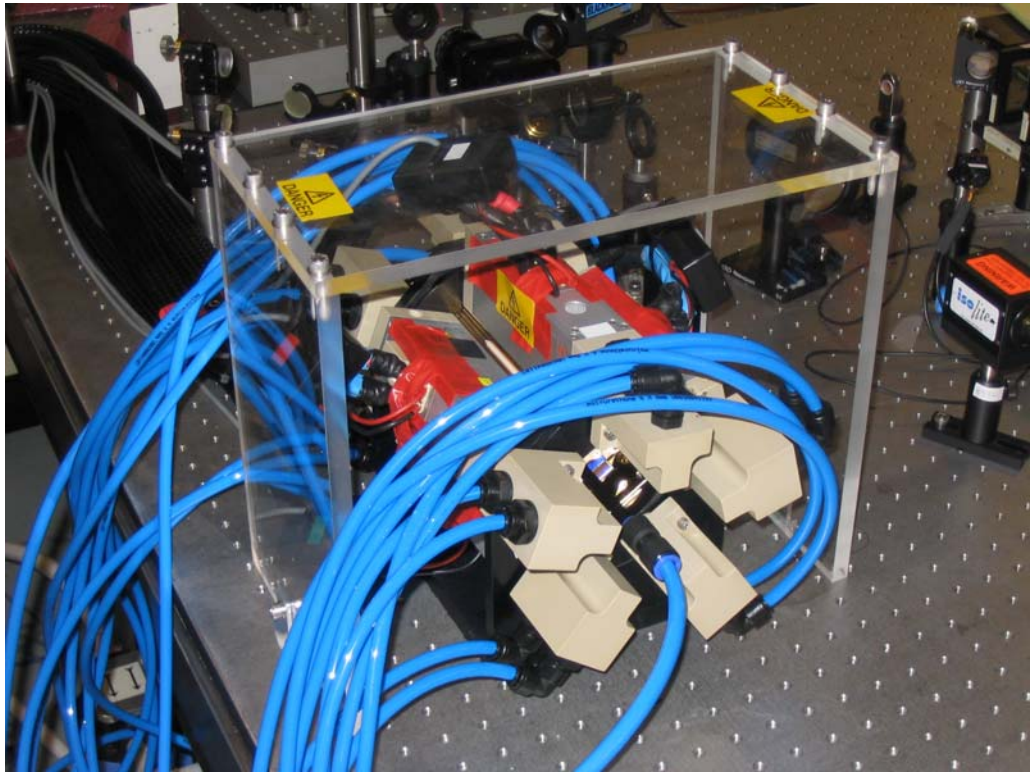

- Amp 1 operational and tested at 5 Hz and 50 Hz
- Cause of rod failure at 50 Hz awaiting further investigation
- Expected output has been delivered (actually slightly exceeded)
- Near-field uniformity should improve with better rod

G J Hirst
Central Laser Facility

Amplifier 1

- Measured output from Amp 1 exceeds target power (3 kW from 3 passes)
- Output saturates in agreement with model

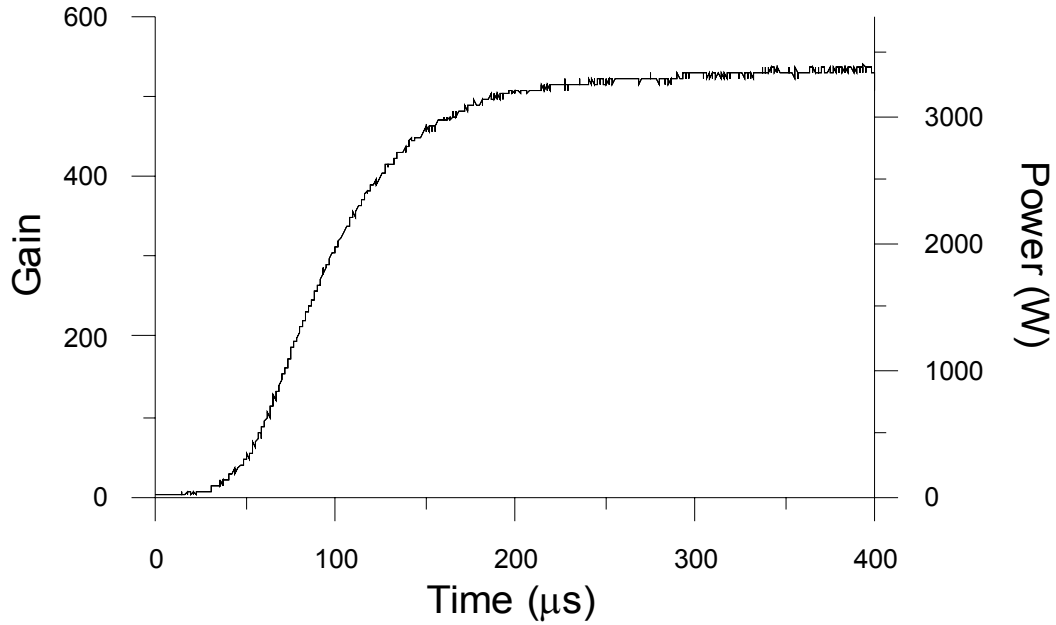

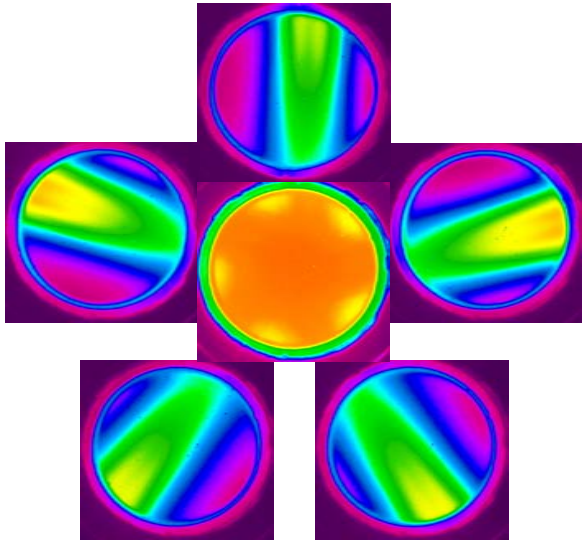

- Pumping arrangement delivers good uniformity across the rod
- Near-field profile is flattened by saturation but shows some effects of rod inhomogeneities

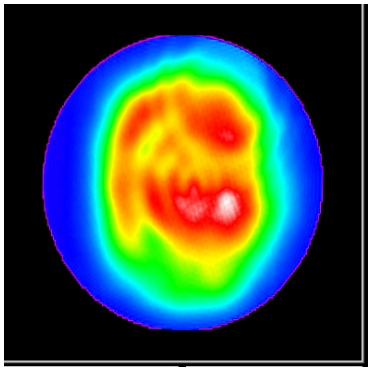

G J Hirst
Central Laser Facility

Pulse slicing

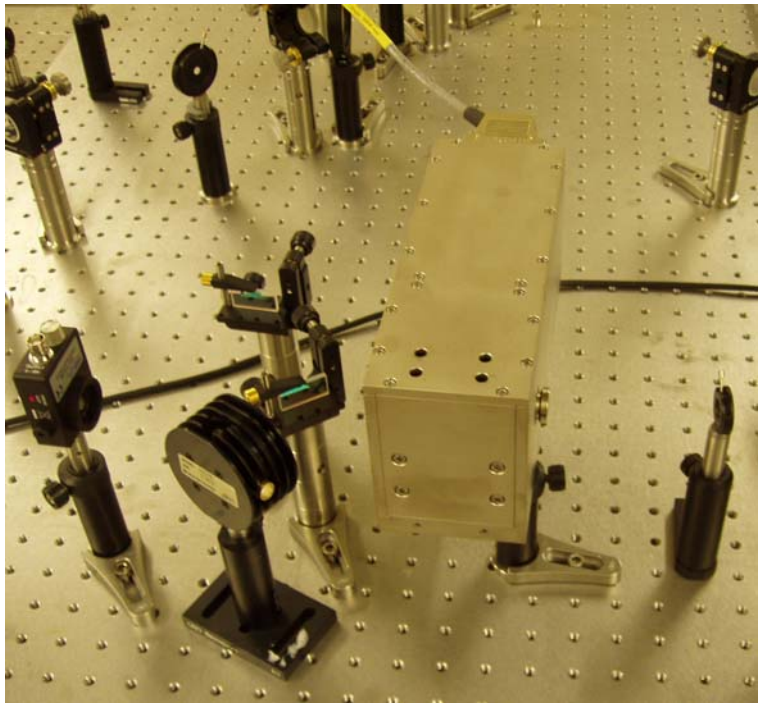

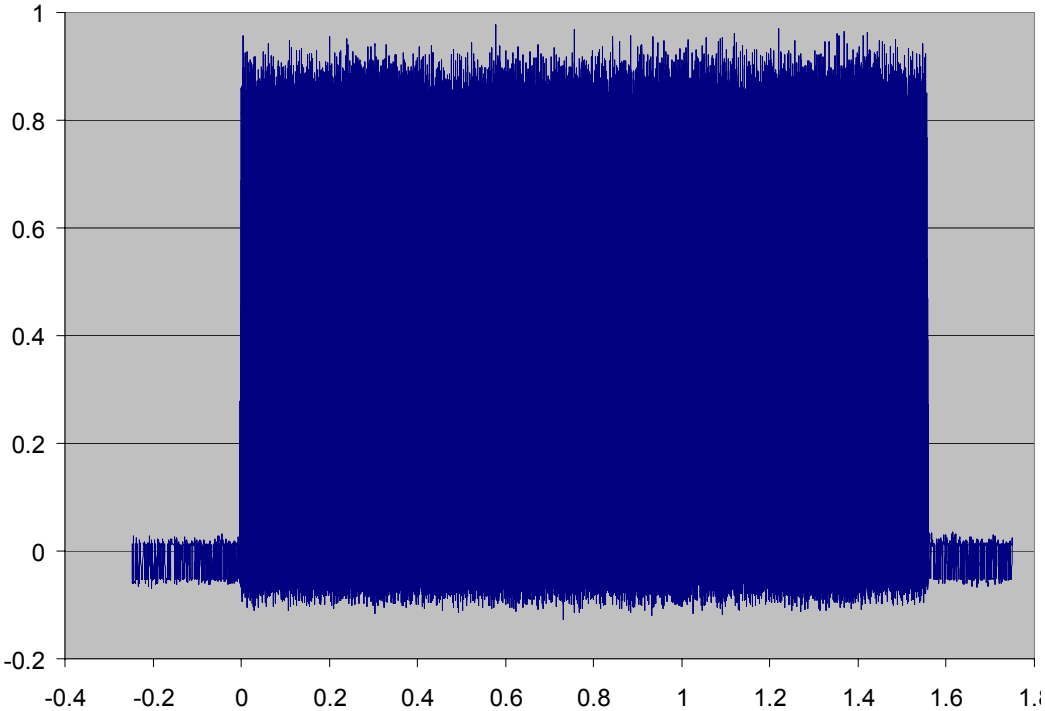

- 1.54μs Pockels cell and driver delivered
- Initial test confirms triggering and basic operation
- Risetime, extinction ratio, throughput and level of induced noise remain to be established (noise level in above trace is misleading)
- Power handling, with additional AOM, remains to be confirmed

G J Hirst
Central Laser Facility

Pockels cell ringing

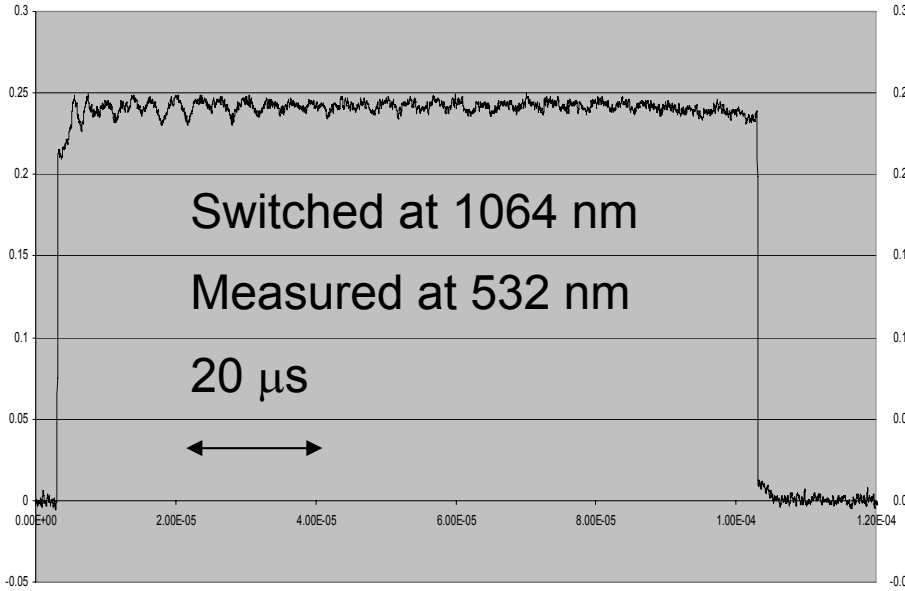

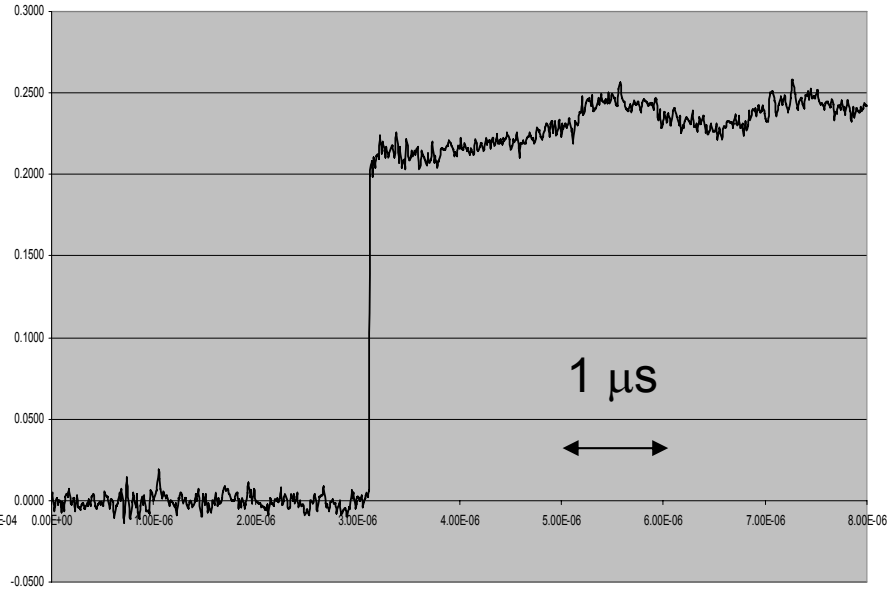

- Note: BBO shows no sign of piezo-ringing
- This compares with fluid-damped KDP behaviour above, albeit on a much longer timescale

G J Hirst
Central Laser Facility

Pulse slicing

AO Q-Switch

QS41-5C-S-SS2

- Industry standard for Nd:YAG lasers
- 24, 27, 41 or 68MHz
- More than 30,000 sold world-wide

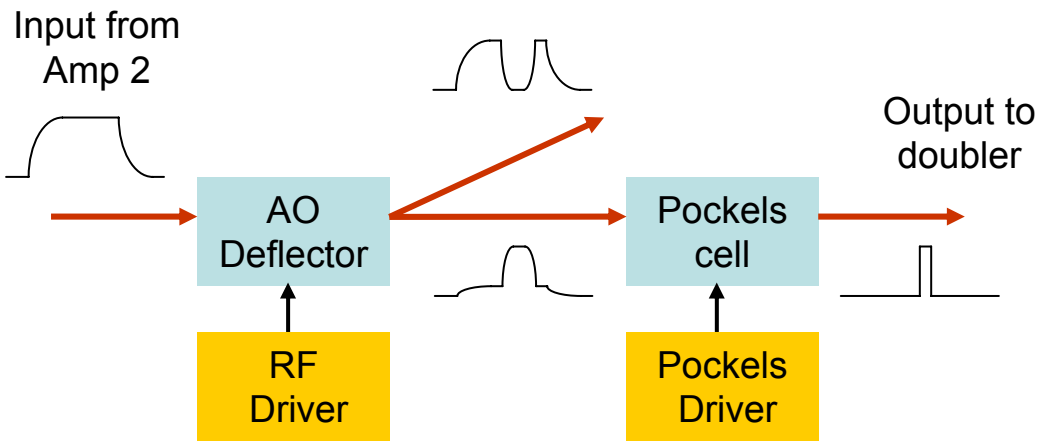

AO deflector could reduce power loading on Pockels cell by up to 80% for most of the macropulse

G J Hirst
Central Laser Facility

Amplifier 2

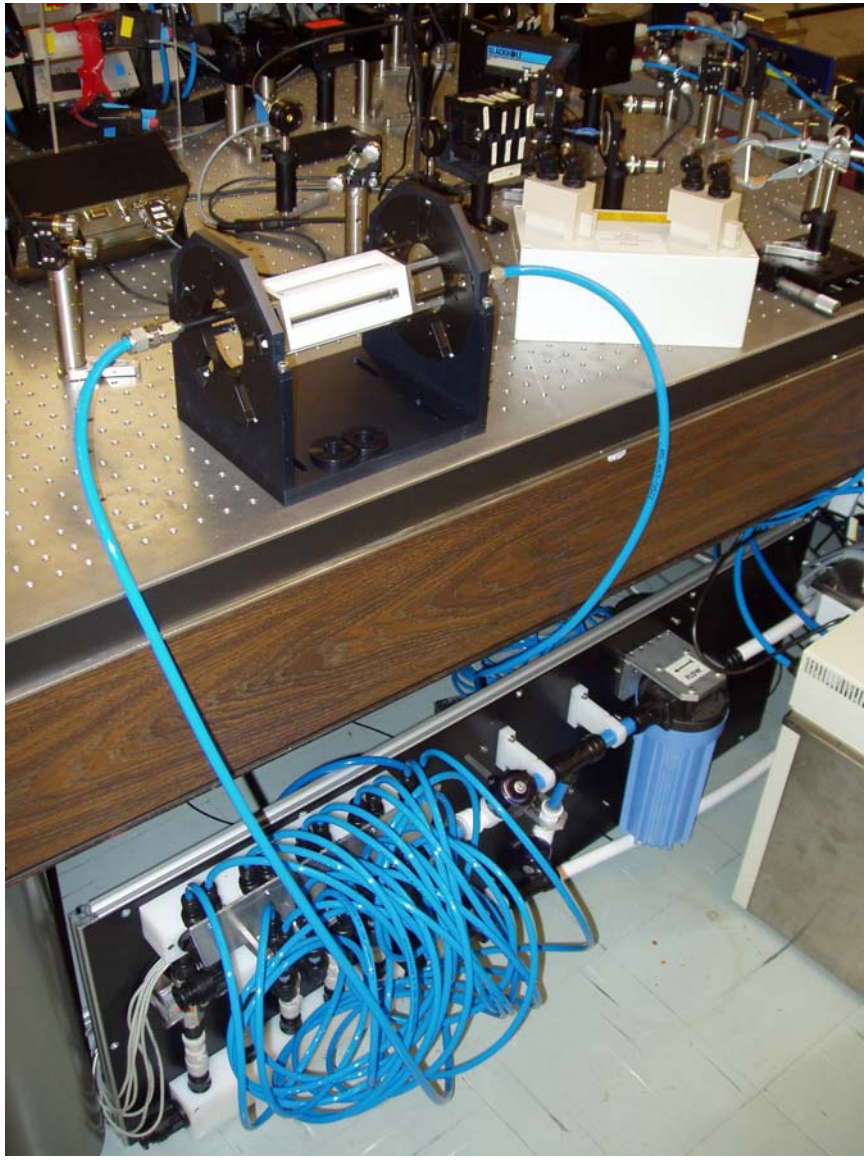

- Amp 2 chiller being commissioned
- Amp 2 components all delivered and pre-assembled, except for cylindrical lenses
- Diode testing then amplifier testing to be carried out over next month
- Thermal lensing measurements will follow

G J Hirst
Central Laser Facility

Pulse coding

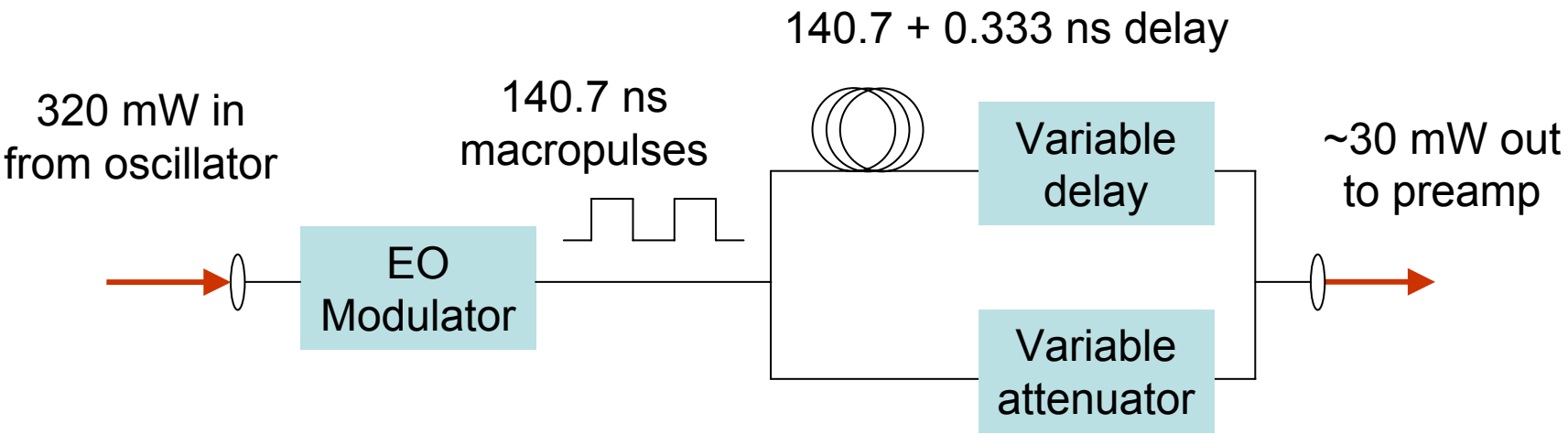

- Fibre modulation, based on telecoms technology, is fast but lossy and limited in average power
- Measurements on the High Q system suggest 10dB loss before the preamp results in <3dB output reduction
- Delay can be adjusted by varying the fibre temperature (~0.5ps/°C)
- Attenuation can be controlled by varying the fibre bending losses
- Modulator is delivered and fibres are due. Fibre testing will be carried out off-line at RAL

G J Hirst
Central Laser Facility

Single pulse slicing

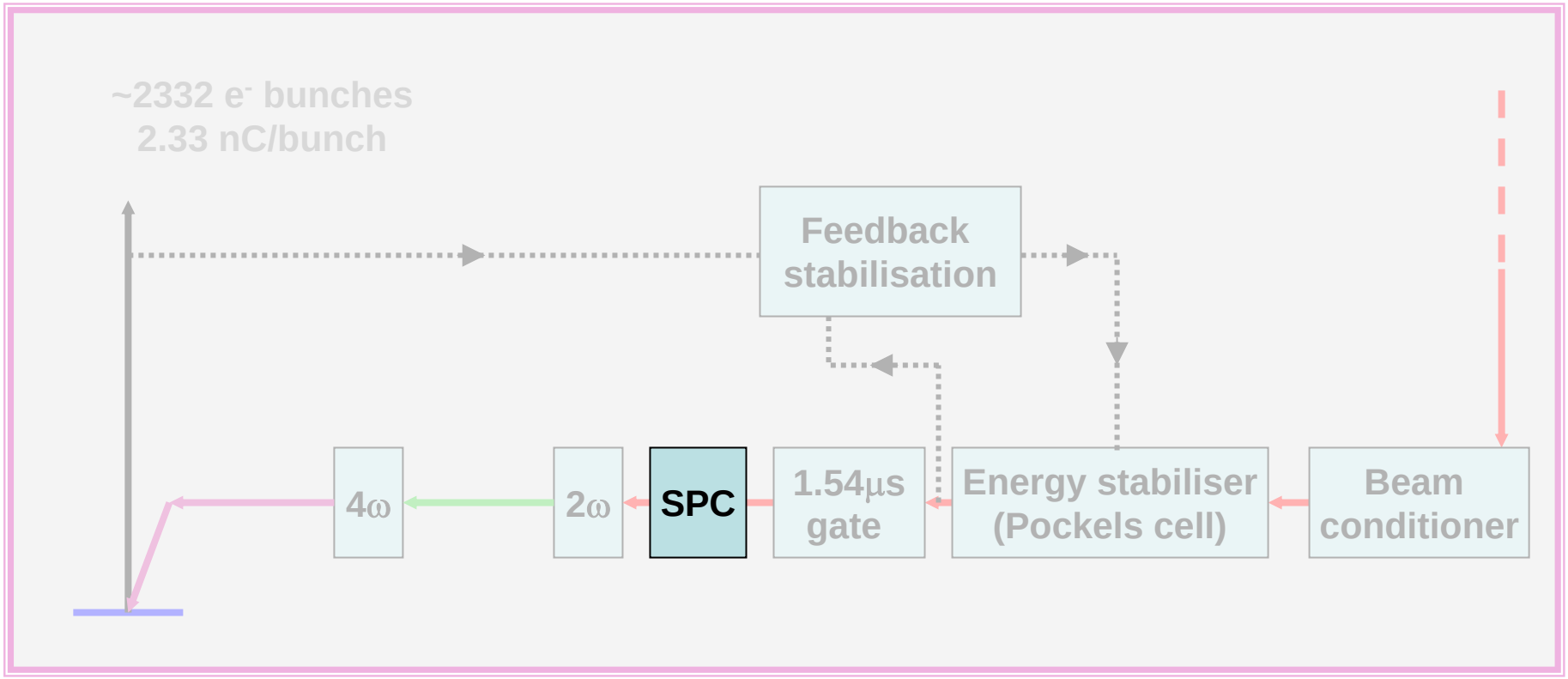

- The single pulse cell needs a small aperture (for speed) so cannot handle high laser power, hence it should be crossed with the 1.54μs cell
- HV drivers are slew-rate limited, so slicing in the IR is challenging
- Finite rise and fall-times may convert timing jitter to amplitude noise

G J Hirst
Central Laser Facility

Single pulse slicing

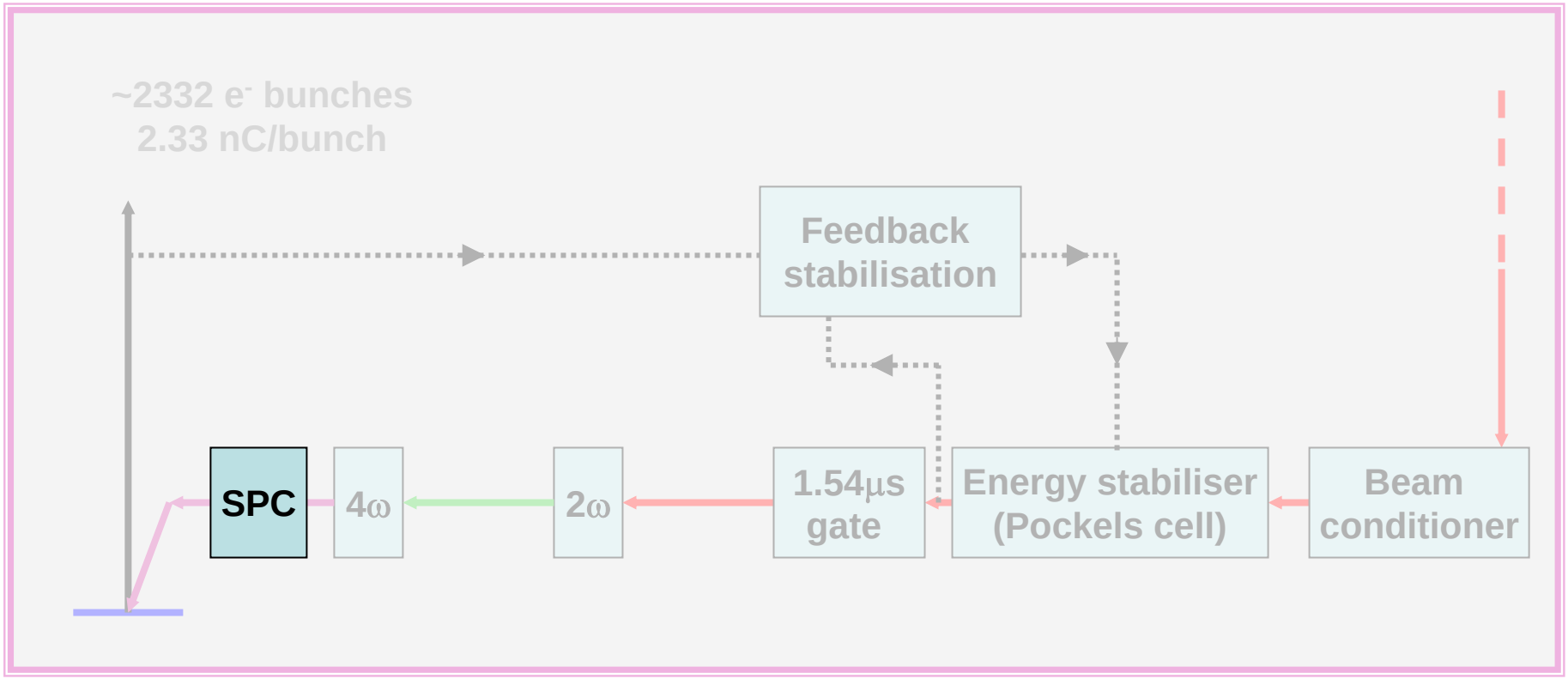

- Slicing in the UV allows the easiest driver design
- But electro-optic materials are vulnerable to UV damage
- Subsequent frequency conversion is not available to remove ghost pulses

G J Hirst
Central Laser Facility

Single pulse slicing

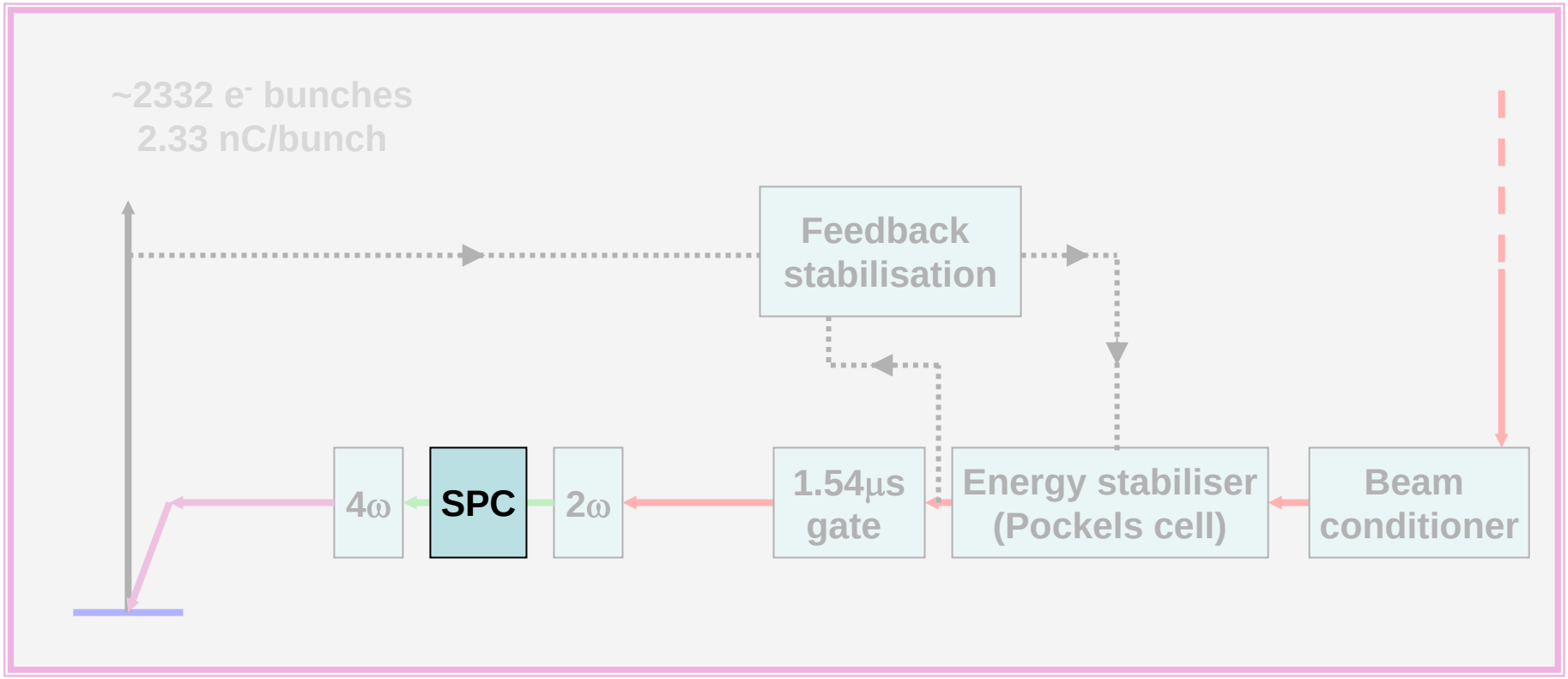

- Slicing in the green should be possible with a double-crystal cell
- This halves the drive voltage, so the requirements are the same as for the UV
- The poorer extinction ratio is mitigated by the subsequent frequency doubling
- This is currently the preferred option

G J Hirst
Central Laser Facility

Frequency multiplying

- Crystals are available for two frequency quadrupling schemes:

  2 × type I in BBO (preferred)

  Type II in KTP + type I in BBO (allows two IR polarisations, perhaps for 3 GHz multiplexing)

- Frequency multiplying will follow successful pulse slicing and control of thermal lensing

G J Hirst
Central Laser Facility

Amplitude stabilisation

ADVANTAGES

Scheme is simple and compact, so could be fast

Sensing before the gate minimises switch-on transients

Laser power at the stabiliser can be low

DISADVANTAGES

No automatic correction of residual error towards zero

Manual tuning of gain & offset

Elements after the sensor do not have their noise corrected

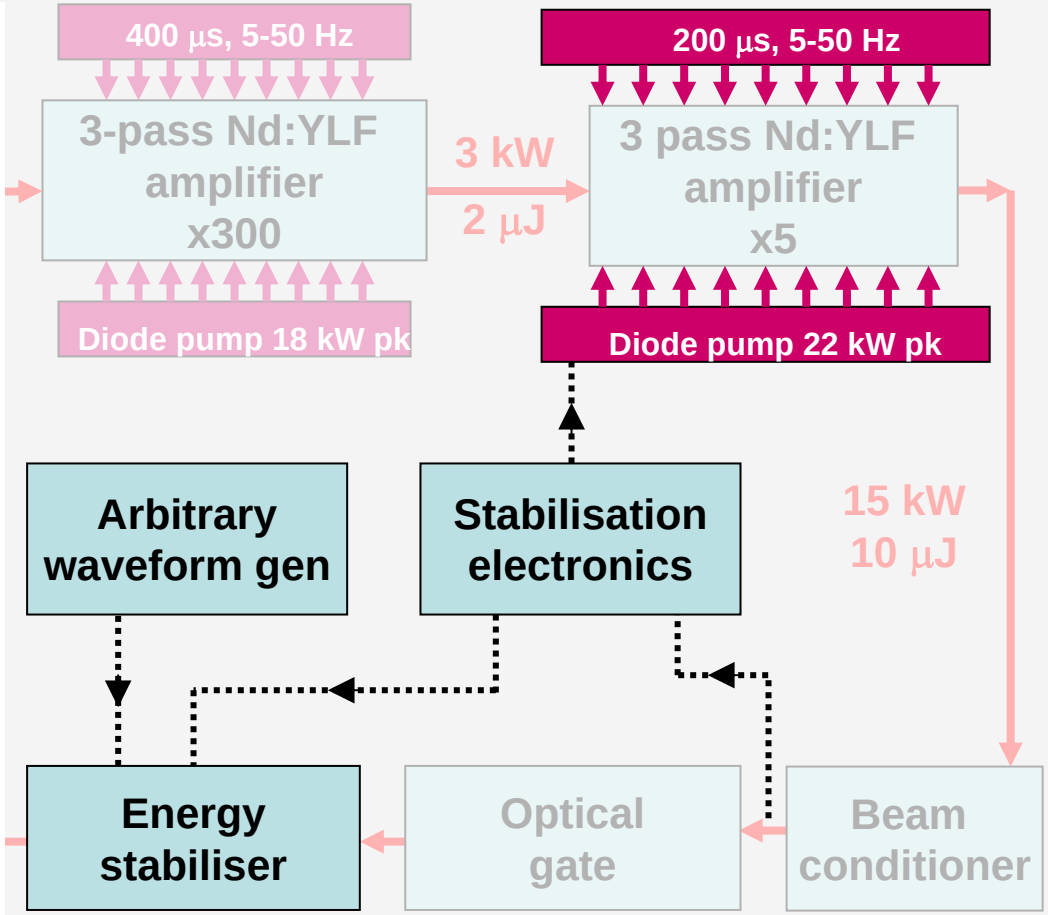

G J Hirst
Central Laser Facility

Amplitude stabilisation

ADVANTAGES

Bunch charge sensing covers all elements and has high sensitivity

Sensing after the stabiliser allows full feedback correction

DISADVANTAGES

No correction signal until the macropulse begins

Long signal paths mean slow response and increased EM noise pickup

More sophisticated control electronics required

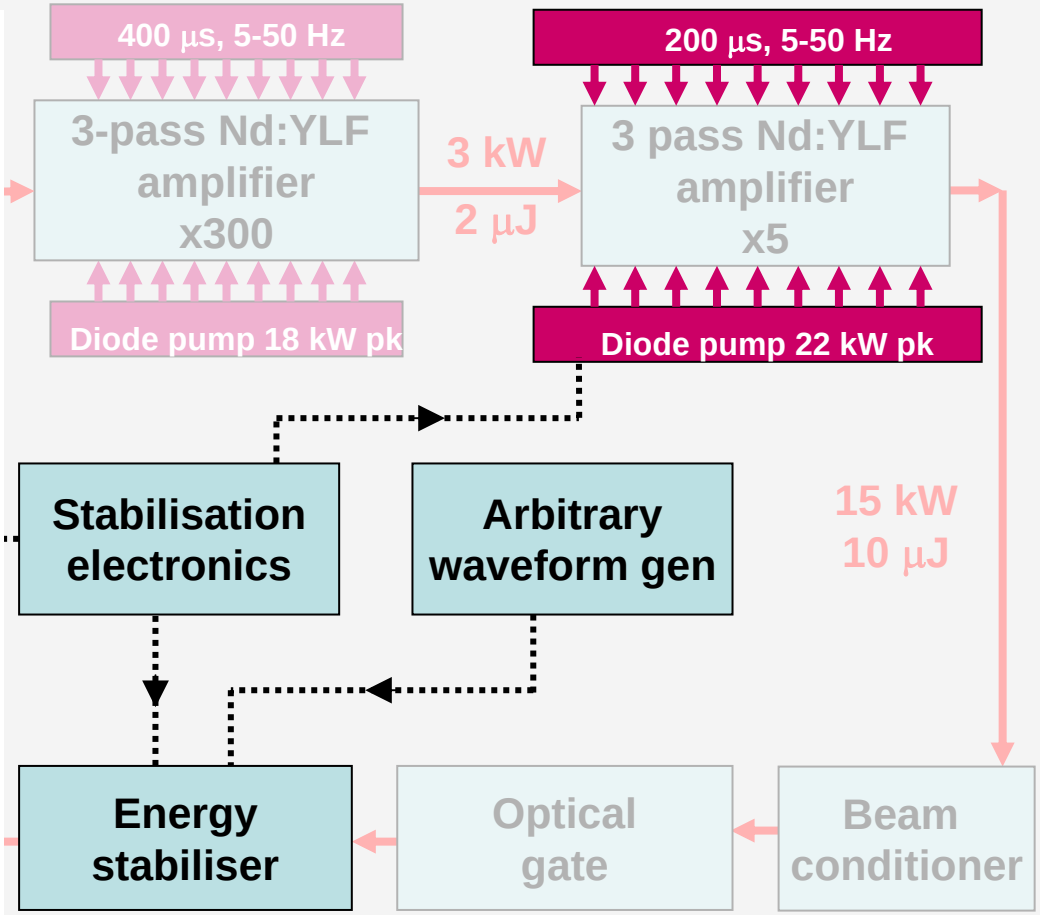

G J Hirst
Central Laser Facility

Linear noise reduction

- High speed, high voltage electronics are easier to implement when linear
- Pockels cells' response is linear near T=0.5 but losses are high
- Simple modelling shows that noise reduction with linear electronics can be acceptable for T≈0.9 if the uncorrected noise is <2% rms

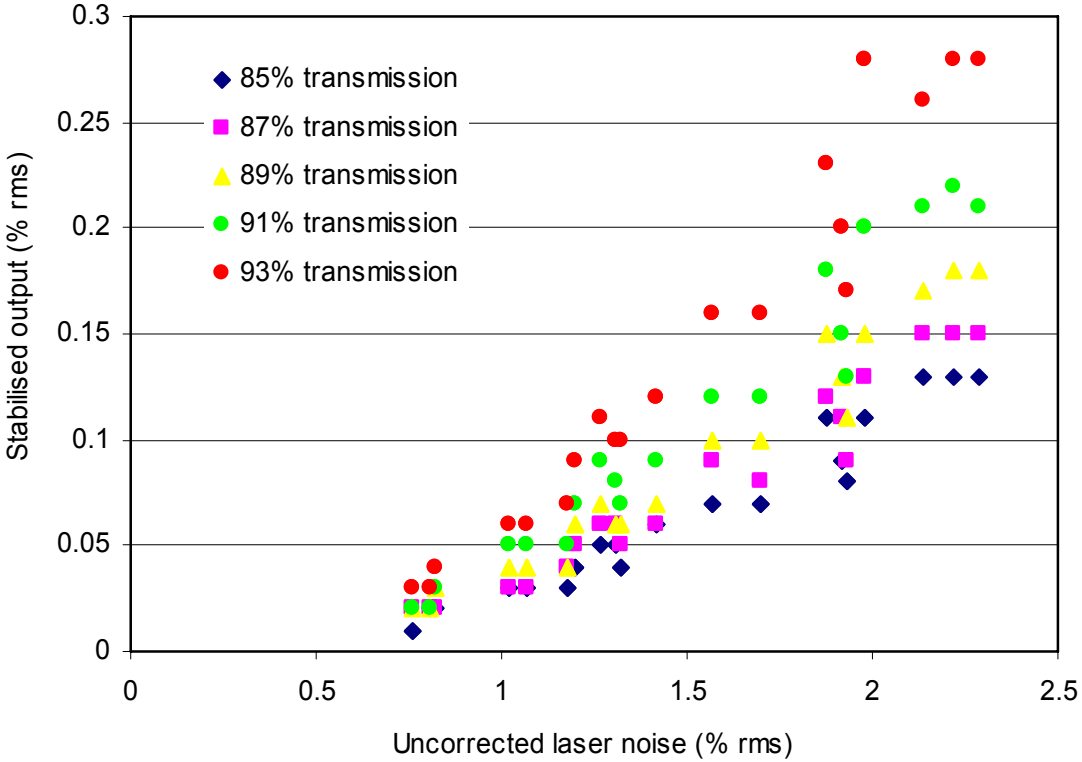

- High speed amplifiers are available* which would allow amplitude correction inside 270 μs macropulse
- Noise control system should be designed around the measured noise spectrum

* e.g. Leysop 250: 275 V, 6 MHz BW into 100 pF

G J Hirst
Central Laser Facility

Safety and machine protection

- Safety interlocks consistent with CERN standards will need to be implemented
- Laser pulse monitoring could allow fast HV switch-off to protect accelerator should laser fail
- HV monitoring can inhibit laser pulses: pulse slicing Pockels cell probably gives fastest response

Task listing

Oscillator & preamplifier	Complete
Synchronisation	Complete
Amplifier 1 (5 Hz)	Complete
1.54 μs slicing (no AOM)	Imminent
Amplifier 2 (5 Hz)	Imminent
Coding principle	Imminent
Thermal lensing correction	
Frequency multiplying	Ship laser to CERN
Coding finalisation	After delivery
Amplitude stabilisation	After delivery
Single-pulse slicing	After delivery
50 Hz testing	After delivery
Safety and machine protection	After delivery

G J Hirst
Central Laser Facility

THE END

G J Hirst
Central Laser Facility

Original laser schematic

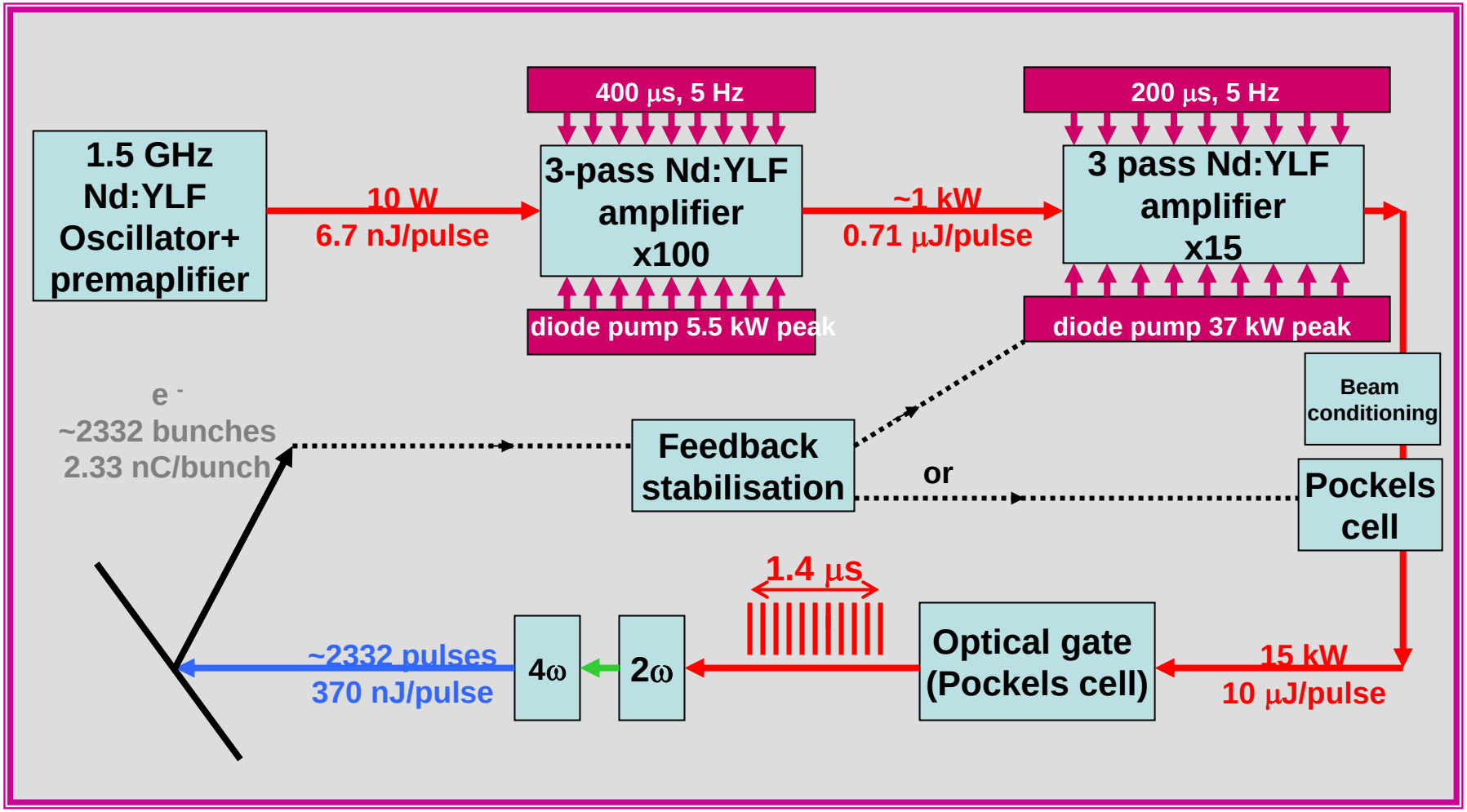

Slide presented at PHIN collaboration meeting, Frascati, May 2004
(see http://www.infn.it/phin/coll_meet.html)

G J Hirst
Central Laser Facility

Laser system schematic

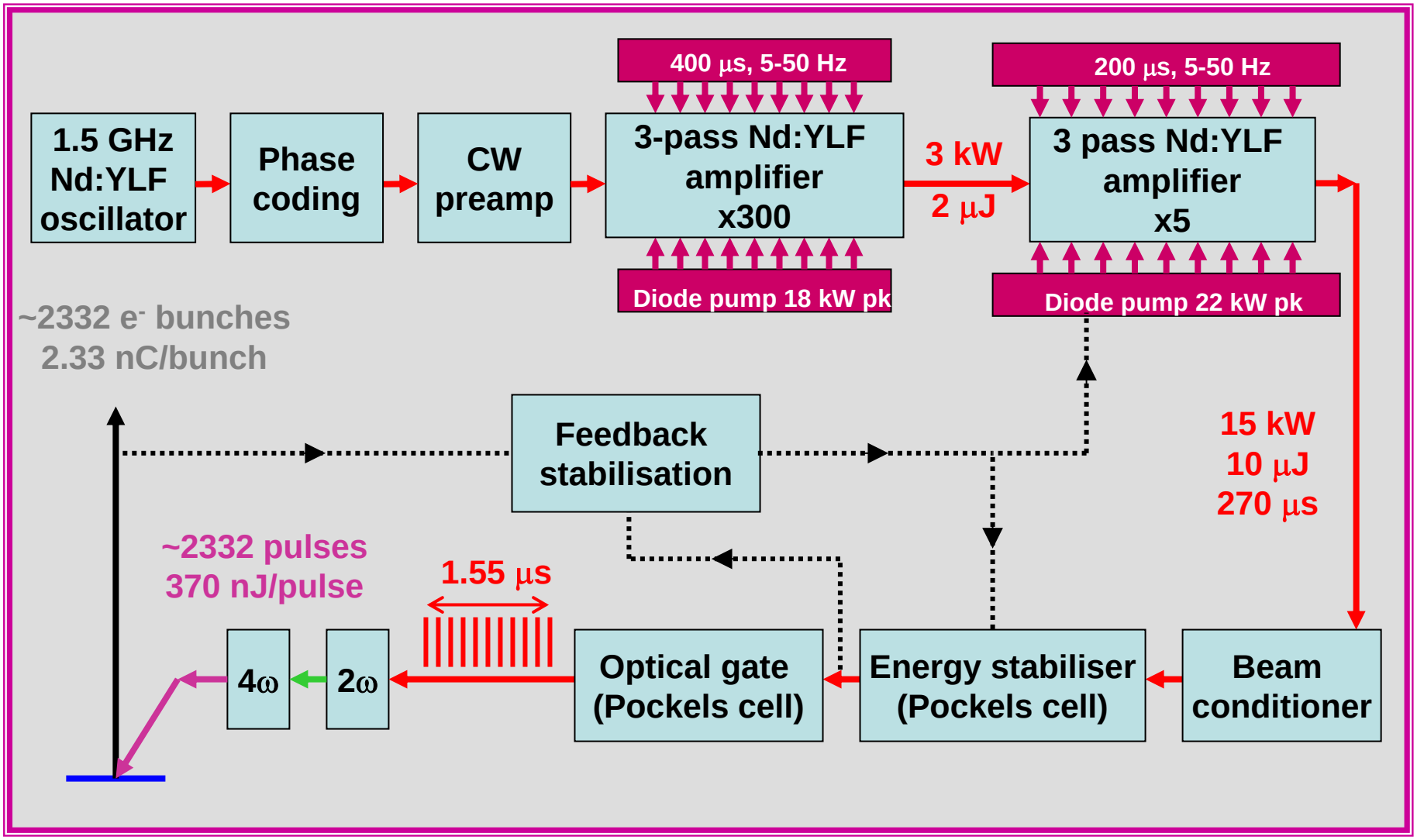

G J Hirst
Central Laser Facility

Stabilisation issues

- Architecture: complex vs simple, versatile vs optimised, digital vs analog
- Correction between macropulses is practical, but much of the noise spectrum may be inaccessible
- Correction during 1.55 μs pulse looks challenging (BW> few MHz into 20pF Pockels cell load needs 10s of mA drive for 100s of volts change)

Manufacturer	Output	Drive	BW	Gain	Slew	Noise
Elbatech T-501-F	±200 V	200 mA	>0.5 MHz	50		1.2mV rms
Leysop 250	275 V	100 pF	6 MHz	>100	3500	
New Focus 3211	±200 V	110 mA	0.5 MHz	40	650	<100mV p-p
Tegam 2350	±200 V	40 mA	0.2 MHz	50	>250	
Trek Inc 603-2	250 V	80 mA	0.15 MHz	50	>100	<20mV rms

- Correction during 270μs macropulse looks practical, but needs sensing before the optical gate and, probably, before the modulator (unless it can take the full laser power)

G J Hirst
Central Laser Facility